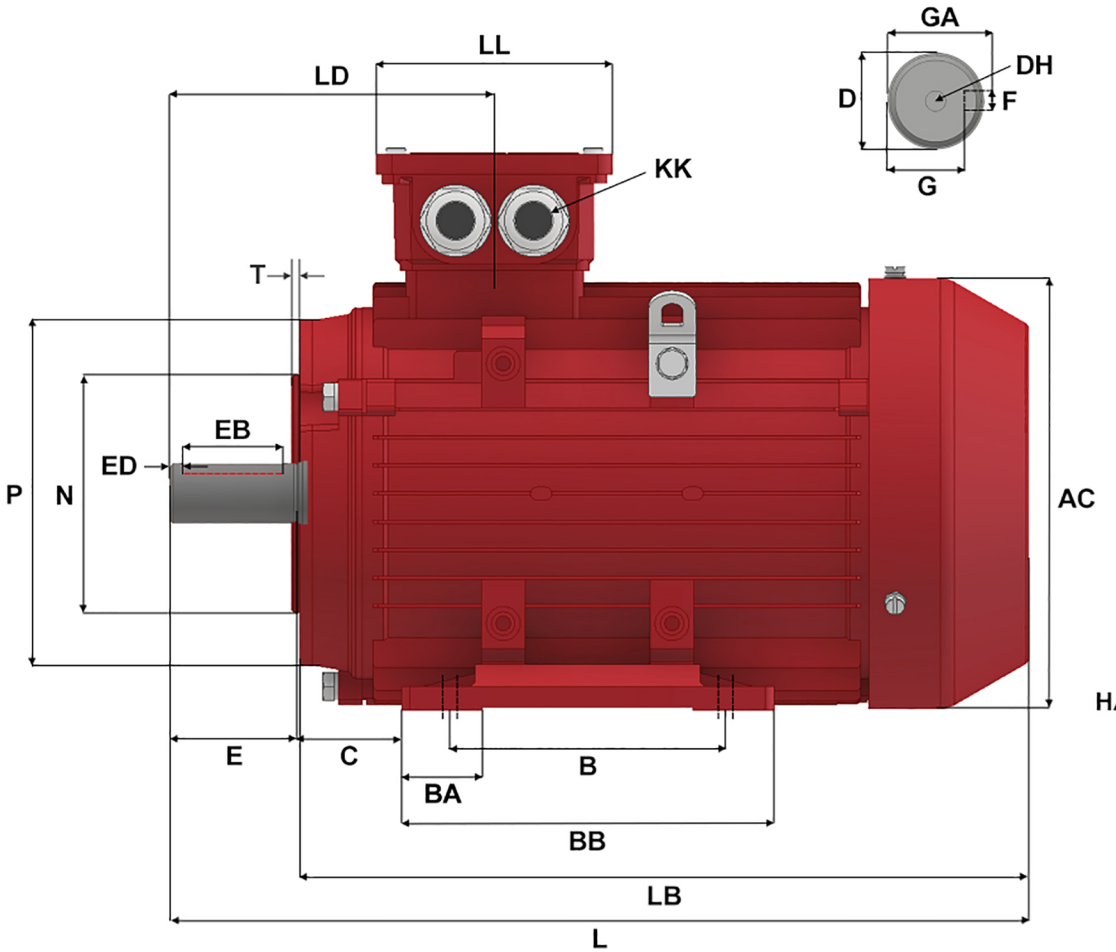

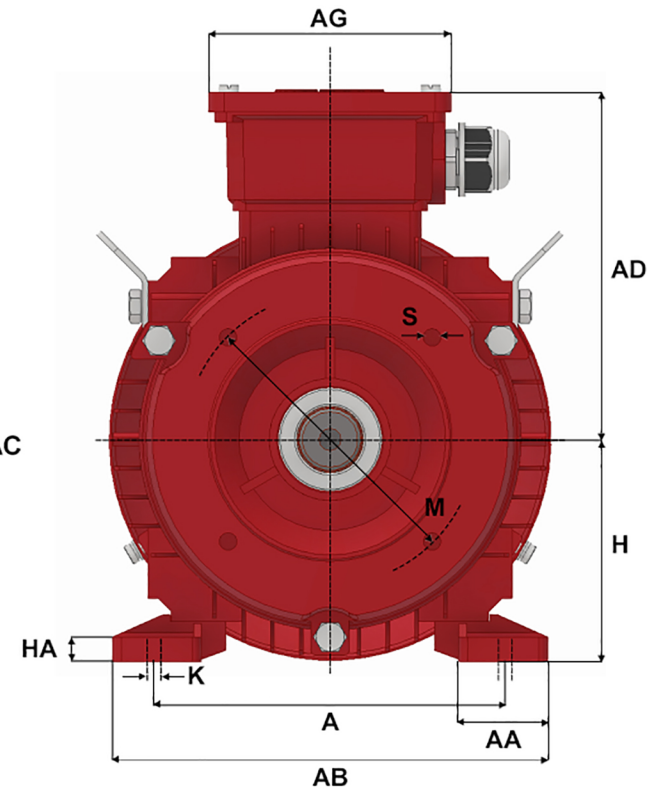

Version: 1JLEM			Revised: 02-16-2023			HP	RPM	FRAME	ENCLOSURE	IJA2100L2-4-B34A		
Customer is responsible in determining that Max Motion product will fit/perform suitably in the intended application						4	1800	100L	TEFC			
A	B	C	D	E	F	G	H	K	L	M	N	P
160	140	63	28	60	8	24	100	12 X 16	380	130	110	160
S	T	AA	AB	AC	AD	AG	BA	BB	DH	EB	ED	GA
M8	3,5	40	196	190	152	109	39	172	M10 X 22	50	5	31
HA	KK (1)	KK (2)	KK (3)	LB	LD	LL						
11	M20 X 1.5	3/4" NPT	-	320	143.5	109						